Ice-O-Matic
THE CHOICE IS CLEAR

Installation Manual

RC10-RC40 Products

9081543-01 Rev D
5/14/2026

11100 E. 45th Avenue • Denver, CO 80239 • Phone: 1.866.PURE.ICE • www.iceomatic.com

Ali GROUP

WELBILT
an Ali Group Company

THIS PARTS LIST CONTAINS THE SERVICE PARTS AVAILABLE FOR THE FOLLOWING MODELS:

RC100C40	RC100C49	RC100G40	RC100G49
RC106C40	RC106C49	RC106G40	RC106G49
RC206C40	RC206C49		
RC306C40	RC306C49		
RC406C40	RC406C49		

Installation Manual

Original Instructions

REMOTE CONDENSER
RC MODEL SERIES

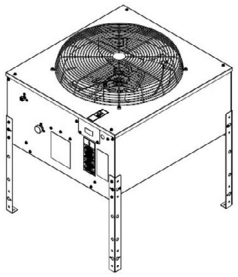

⚠ WARNING

BEFORE PROCEEDING, VERIFY YOUR PRODUCT'S REFRIGERANT TYPE

- Refrigerant type is designated on the product's Serial Nameplate
- Refrigerant type is designated on the product's Specification Sheet
- Refrigerant type can be determined from the model number. The last two digits preceding the hyphen indicate the refrigerant type. For example, model RC306C40 contains refrigerant R-404A as indicated by the "40" at the end of the model number. Model numbers containing "49" at the end contain refrigerant R-449A.

TABLE OF CONTENTS

REMOTE CONDENSER SAFETY 2
MODEL NOMENCLATURE 2
CONFIGURATIONS 3
CONDENSER DIMENSIONS 3
EQUIPMENT RATINGS 4
INSTALLATION INSTRUCTIONS 4
OPERATION 7
SERVICE 7
DISPOSAL 7
WARRANTY AND SERVICE PROVIDERS 7
CONTACT 7

REMOTE CONDENSER SAFETY

Your safety and the safety of others are very important.

Many important safety messages have been provided in this manual and on the appliance. Always read and obey all safety messages.

This is the safety alert symbol.
This symbol alerts you to potential hazards that can kill or hurt you and others.
Safety messages will follow the safety alert symbol and either the word “DANGER” OR “WARNING”. These words mean:

DANGER Indicates death or serious injury will result if proper precautions are not taken.

WARNING Indicates death, serious injury, or property damage can result if proper precautions are not taken.

This is the Risk of Fire / Flammable Materials symbol.
This symbol alerts you to the presence of flammable materials.
When this symbol appears in this manual or on the ice maker, care should be taken to avoid causing a fire by igniting flammable material.

This is the Potable Water symbol.
This symbol indicates that connection to potable drinking water supply is required.

DANGER

Please read these instructions completely before starting the installation or performing any service. Failure to follow the instructions and safety precautions in this manual can result in serious injury or death. Manufacturer assumes no responsibility for improperly installed equipment.

IMPORTANT SAFETY INSTRUCTIONS

WARNING: To reduce the risk of fire, electric shock, or injury to persons when using the ice maker, follow basic precautions, including the following:

- This appliance is not intended for use by persons (including children) with reduced physical, sensory, or mental capabilities, or lack of experience and knowledge, unless they have been given supervision or instruction concerning the use of the appliance by a person responsible for their safety.
- Do not store explosive substances such as aerosol cans with a flammable propellant in this appliance.
- This appliance is not to be used at altitudes exceeding 14,000 ft [4,267 m].
- WARNING: Product shall only be connected to an appliance suitable for the same refrigerant.

SAVE THESE INSTRUCTIONS

FREIGHT CLAIMS

INSPECT PROMPTLY: This merchandise has been carefully inspected an packed in accordance with the carrier’s packing specifications. Responsibility for safe delivery has been assumed by the carrier. If loss or damage occurs, you as the consignee must file a claim with the carrier and hold the container for carrier’s inspection.

VISIBLE LOSS OR DAMAGE: Any external evidence of loss or damage must be fully described and noted on the freight bill or express receipt and signed by the carrier’s agent. The claim should be filed on a form available from the carrier.

CONCEALED LOSS OR DAMAGE: If loss or damage does not appear until merchandise has been unpacked, make a written request for inspection by the carrier within five days of delivery date, then file a claim on a form from the carrier.

FILE CLAIMS WITHOUT DELAY—DO NOT RETURN DAMAGED GOODS TO MANUFACTURER

MODEL NOMENCLATURE

RC 10 0 C 49

Model Series
Remote Condenser

Approximate Capacity
Btu/hr x 1000

Electrical Designator
0 = 115V / 50Hz or 60Hz
6 = 208-230V / 50Hz or 60Hz

Model Type
C = For Cuber Type Ice Maker (with Headmaster)
G = For Flake/Nugget Type Ice Maker (without Headmaster)

Refrigerant Designator
40 = R404A
49 = R449A

CONFIGURATIONS

IMPORTANT: The RC Series remote condensers may only be used with compatible Ice-O-Matic® ice makers. All rack-type condenser systems must receive written approval from manufacturer.

WARNING: The Ice Maker, Remote Condenser, and Remote Line Set must all utilize the same refrigerant. Failure to do so will result in product damage.

R-449A Models

RC Model	Compatible Ice Maker Models
RC100C49	CIM0530(+)R49
RC100G49	GEM0650R49; MFI0800R49
RC106C49	CIM0636(+)R49
RC106G49	GEM0956R49; MFI1256R49; GEM1306R49, MFI1506R49
RC206C49	CIM0826(+)R49; CIM0836(+)R49; CIM1126(+)R49; CIM1136(+)R49
RC306C49	CIM1446(+)R49; ICE1506(+)R49; GEM2006R49; MFI2306R49
RC406C49	CIM2046(+)R49

Where (+) is F, H, or G

R-404A Models

RC Model	Compatible Ice Maker Models
RC100C40	CIM0530(+)R#
RC100G40	GEM0650R#; MFI0800R#
RC106C40	CIM0636(+)R#
RC106G40	GEM0956R#; MFI1256R#; GEM1306R#, MFI1506R#
RC206C40	CIM0826(+)R#; CIM0836(+)R#; CIM1126(+)R#; CIM1136(+)R#
RC306C40	CIM1446(+)R#; ICE1506(+)R#; GEM2006R#; MFI2306R#
RC406C40	CIM2046(+)R#

Where # is a 1- or 2-digit number and (+) is F, H, or G

Remote Line Sets and Accessories

Part Number	Description
RL49-25	Pre-charged R-449A, 25 ft [7.6 m] Line Set
RL49-40	Pre-charged R-449A, 40 ft [12.2 m] Line Set
RL49-75	Pre-charged R-449A, 75 ft [22.9 m] Line Set
RL404-25	Pre-charged R-404A, 25 ft [7.6 m] Line Set
RL404-40	Pre-charged R-404A, 40 ft [12.2 m] Line Set
RL404-75	Pre-charged R-404A, 75 ft [22.9 m] Line Set
KRL-25	Kit, non-charged, 25 ft [7.6 m] Line Set
KRL-40	Kit, non-charged, 40 ft [12.2 m] Line Set
KRL-75	Kit, non-charged, 75 ft [22.9 m] Line Set
1051255-01	Kit, quick connect couplings only: Qty (2) 3/8” and Qty (2) 1/2” Couplings

REFRIGERANT CHARGE

All remote condenser models are pre-charged with 16 oz [454 g] of either R-449A or R-404A refrigerant. Pre-charged line sets contain 4 oz [113 g] of either R-449A or R-404A refrigerant. Refer to Ice Maker serial nameplate for required total system charge.

CONDENSER DIMENSIONS

RC Model	Width	Length	Base Height	Total Height
RC10* RC20*	28.9 in [734 mm]	31.1 in [791 mm]	18.7 in [474 mm]	34.1 in [874 mm]
RC30*	30.9 in [784 mm]	34.6 in [879 mm]	19.2 in [487 mm]	34.9 in [887 mm]
RC40*	30.9 in [784 mm]	34.6 in [879 mm]	23.2 in [588 mm]	38.9 in [988 mm]

* Followed by additional letters and numbers

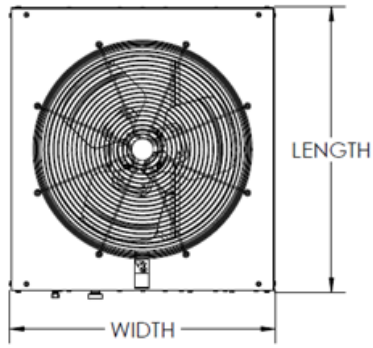

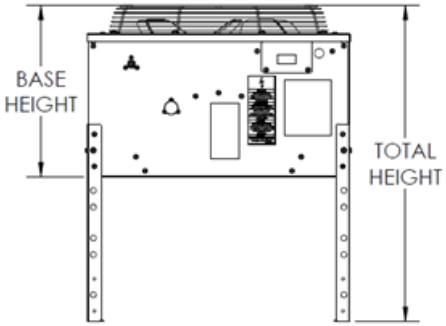

MODELS RC10*, RC20*

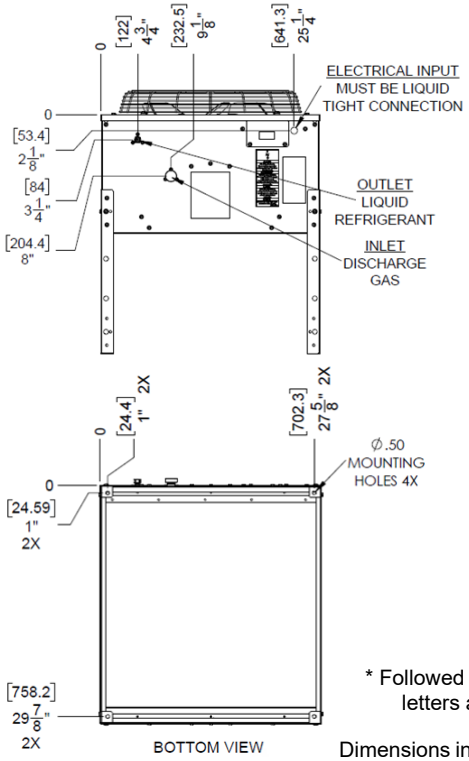

* Followed by additional letters and numbers

Dimensions in inches [mm]

MODELS RC30*

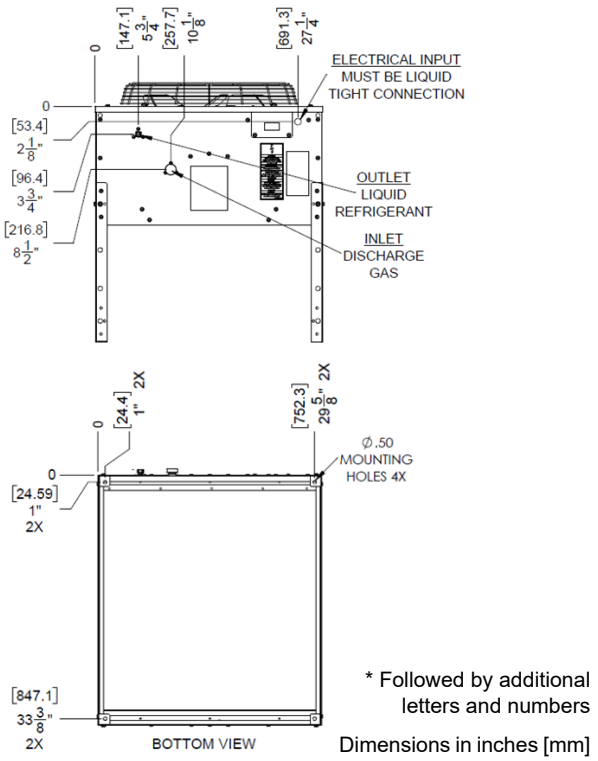

* Followed by additional letters and numbers

Dimensions in inches [mm]

MODELS RC40*

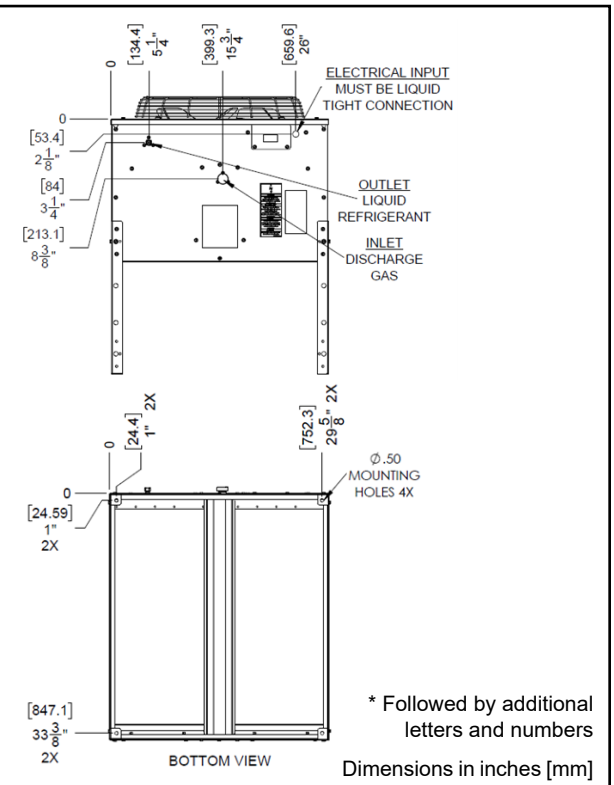

* Followed by additional letters and numbers

Dimensions in inches [mm]

EQUIPMENT RATINGS

- Ambient Air Temperature: -20 to 120 °F [-28.9 to 48.9 °C]
- Approved for Outdoor Installation
- R-449A GWP (AR5): 1282
- R-449A ASHRAE Safety Classification: A1
- R-404A GWP (AR5): 3943
- R-404A ASHRAE Safety Classification: A1

INSTALLATION INSTRUCTIONS

Overview

Ice-O-Matic® remote condenser systems are comprised of three components: the pre-charged remote condenser, the pre-charged ice maker, and the pre-charged line set. For installation of the ice making head, reference the installation instructions supplied with the ice maker.

Select a Location

The proper selection of a location for the remote condenser is critical to the performance and longevity of the ice-making system. Please follow these guidelines when choosing a location for your remote condenser:

- This product shall not be installed within 20 ft [6.1 m] of any building opening. If this product is enclosed within a penthouse, lean-to, or other open structure, natural or mechanical ventilation shall be provided. Refrigerant circuit access ports located outdoors shall be secured to prevent unauthorized access.
- The remote condenser shall not be used in areas where sufficient airflow is not available. It shall not be installed in the same area where the ice maker is installed.
- Choose a location which is protected from extremes of dirt, dust, rain, hail, sun, and prevailing winds.
- Consider the effect of the heat being rejected into the condenser installation area and ensure this additional heat is acceptable.
- Vertical air discharge requires at least 48 inches [1.2 m] clearance above the condenser.
- Condenser must have a minimum clearance of 18 inches [457 mm] on three sides. One side must be open for proper ventilation.
- Install condenser with included legs. Condenser must have a minimum clearance of 15 inches [381 mm] between the mounting surface and the condenser base.
- Condenser must be installed on a level surface.
- Condenser location higher than the ice maker is preferred.
- Installation location may be affected by local building codes. Be sure to follow all applicable local, state, and national building, plumbing, and electrical codes.

Location Rise and Run Limits

Use the following information for planning the placement of the remote condenser relative to the ice machine.

The remote condenser location must not exceed ANY of the following. Configurations that do not meet these requirements must receive written authorization from the manufacturer.

- Maximum rise from the ice machine to the remote condenser: 35 physical feet [10.67 physical meters]
- Maximum drop from the ice machine to the remote condenser: 10 physical feet [3.05 physical meters]
- Maximum line set length: 75 physical feet [22.86 physical meters]
- Maximum calculated line set length: 100 feet [30.48 m]

Determine the calculated line set length using the formulas below:

Calculated line set length = Drop + Rise + Horizontal Run
Drop = dd x 6.6 where dd = drop distance in ft or m
Rise = rd x 1.7 where rd = rise distance in ft or m
Horizontal Run = horizontal distance in ft or m

IMPORTANT: Do not route a line set that rises, then falls, then rises. Do not route a line set that falls, then rises, then falls. See diagram below.

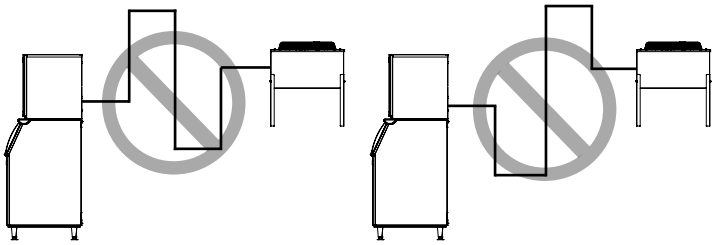

Equivalent Run Calculation Example: Rise

Calculated line set length = (Rise x 1.7) + (Drop x 6.6) + Horizontal Run
Calculated line set length = (35 x 1.7) + (0 x 6.6) + 40
Calculated line set length = 99.5 ft

Calculated line set length must not exceed 100 ft

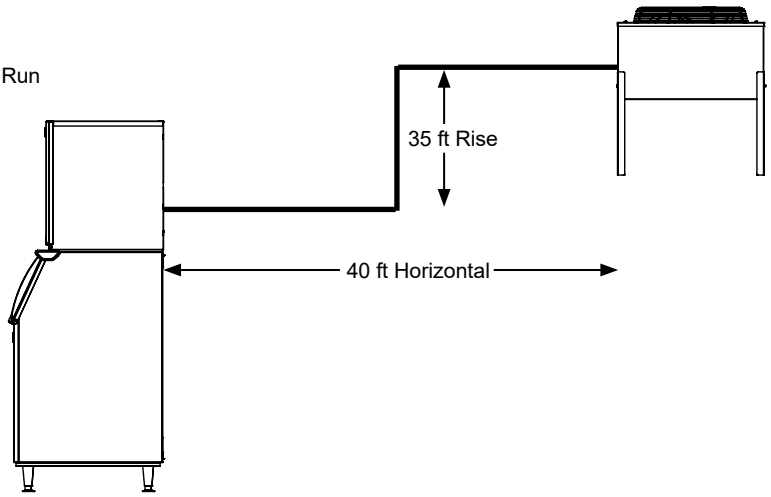

Equivalent Run Calculation Example: Drop

Calculated line set length = (Rise x 1.7) + (Drop x 6.6) + Horizontal Run
Calculated line set length = (0 x 1.7) + (10 x 6.6) + 34
Calculated line set length = 100 ft

Calculated line set length must not exceed 100 ft

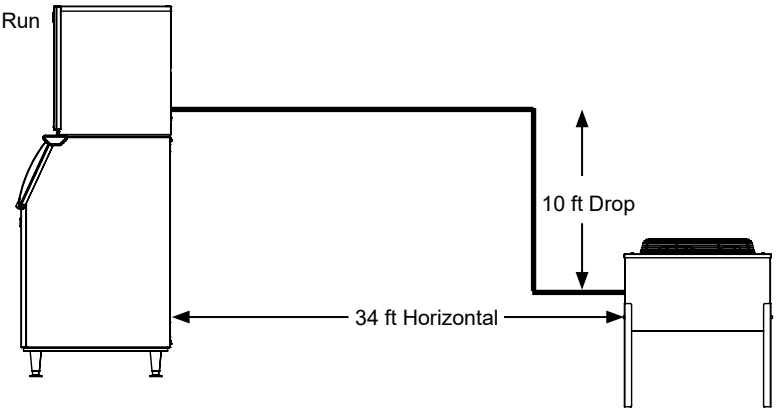

Unpack the Remote Condenser

⚠ WARNING

Excessive Weight Hazard

Use two or more people to move and install or uninstall the appliance.

Failure to do so can result in back or other injury.

⚠ WARNING

Sharp Edges Hazard

Wear cut resistant gloves when handling appliance.

Failure to do so can result in lacerations or other injury.

Remove the Packaging

- Remove the cardboard box from the remote condenser.
- Lift the remote condenser off the pallet.

Remove and Install Condenser Legs

Condenser legs are secured to the appliance in a shipping configuration. Perform the following steps to prepare the unit for installation:

- Remove (3) screws from each leg to remove it from the condenser assembly. Save the screws.
- Flip the leg assembly as shown
- Secure the leg to the condenser assembly using the previously removed screws

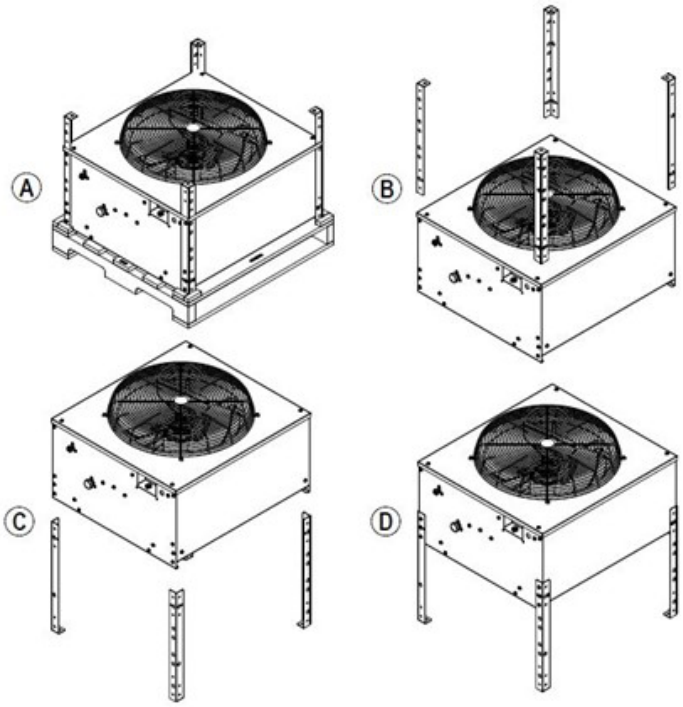

Secure to Mounting Surface

Secure the remote condenser to its mounting surface using the methods and practices appropriate for the mounting surface. Each leg is provided with a 0.50 in [12.7 mm] mounting hole. If attaching to a roof, use a qualified roofing technician to perform mounting to prevent leaks and other roof damage. Attachment method shall conform to all applicable building codes.

Route Refrigerant Tubing

⚠ WARNING

Pre-charged Line Sets Under Pressure

Wear eye protection when handling pre-charged line sets.

Failure to do so can result in eye or other injury.

Each set of pre-charged refrigerant line sets consists of a 3/8 inch diameter liquid line and a 1/2 inch diameter discharge line. Both ends of the refrigerant lines have quick connect couplings and Schrader valve service connections.

WARNING: When handling pre-charged refrigerant line sets, extreme care should be taken to ensure tubing is not kinked or cracked. Kinked tubing can result in a poorly performing ice making system. A cracked tube will require repair by a qualified refrigeration technician.

Plan Refrigerant Tubing Route

Plan the route of the refrigeration tubing between the ice maker and the remote condenser. Follow these guidelines to ensure proper performance and longevity of the ice making system:

- **IMPORTANT:** Excess tubing shall be coiled inside the building in a vertical spiral as shown below.
- All tubing routed outdoors shall be insulated to protect against external ambient conditions.
- Tubing should follow straight line routing whenever possible.
- The lowest location in the tubing run should be the connection at the rear of the ice maker.

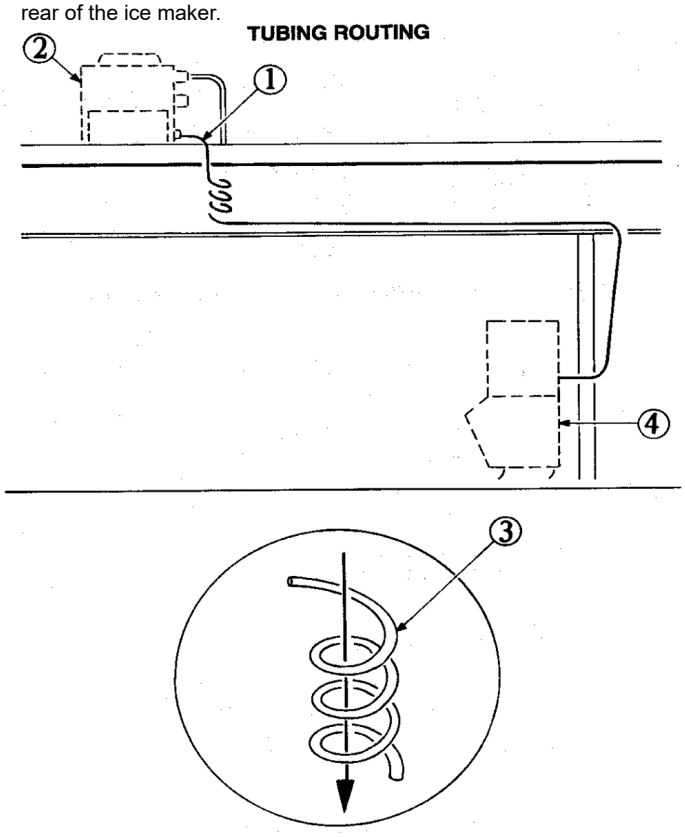

Make Roof/Wall Openings for Tubing

Make openings in walls and/or roof as needed to route refrigerant tubing through. Hole size shall be minimum 1.75 inch [44.5 mm] diameter.

Route Refrigerant Tubing

- Route refrigerant tubing as planned, following guidelines above
- Have a qualified technician seal holes in walls/roof following all applicable building codes

Note: Do not connect the pre-charged tubing until all routing and forming of the tubing is complete. Failure to do so may result in equipment damage.

Make Refrigerant Tubing Connections to Remote Condenser and Ice Maker

The couplings supplied with pre-charged line sets are self-sealing when installed properly. To ensure a leak-free installation, follow these instructions carefully.

- **Preparation:** Remove caps and plugs from the couplings when ready to connect. Check the threads and seals for damage. Wipe away any foreign material from the coupling threads and sealing surfaces with a clean cloth.
- **Lubricate:** Apply POE (polyol ester) refrigerant oil to the surfaces of the diaphragms, o-rings, and threaded areas of the couplings. Failure to apply lubricant can result in damage and leaks. POE oil is included with line sets and line set kits. Use a small applicator brush and liberally apply lubricant.
- **Hand Tighten:** Ensure that the coupling halves are held in proper alignment with each other prior to starting the threads. The coupling end faces should be parallel with each other and visually in-line. Tighten by hand for the initial 2-3 rotations of the swivel nut. If it is too difficult to get started by hand, repositions the nut for proper alignment. Do not force the connection as cross-threading may occur.
- **Wrench Tighten:** Using two appropriate sized wrenches (see table below), tighten the swivel nut while preventing rotation of the coupling body. As the swivel nut is tightened, the diaphragms will start to be pierced and there will be an increase in resistance. Important: Do not let the coupling bodies rotate during any portion of the installation or damage will occur. Continue to tighten the swivel nut until there is a definite increase in resistance and metal-to-metal contact occurs. At this point, the swivel nut will have covered most of the threads.
- **Final Tighten:** A final 1/4 turn (90° rotation) is necessary to ensure the formation of a leak-free sealed connection between the couplings. Using a marker or scribe, mark a line lengthwise from the coupling swivel nut to either the bulkhead or coupling body. Then tighten an additional 1/4 turn (90° rotation), using the marking on the swivel nut to confirm. Do not over tighten.
- **Leak Check:** Once all connections have been made, check each connection for leaks.

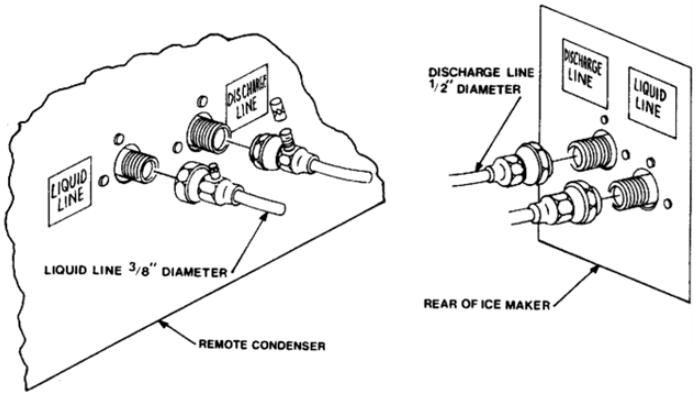

Coupling Size	Required Wrench Size		
	Female Coupling Body	Female Coupling Swivel Nut	Torque min-max
3/8 inch	5/8 inch	13/16 inch	10-12 ft-lb [13.6 - 16.3 Nm]
1/2 inch	1 inch	1-5/16 inch	35-45 ft-lb [47.5 - 61.0 Nm]

Make Electrical Connections

⚠ WARNING

Electrical Shock Hazard

Electrical connection must be made by authorized service personnel.

Failure to do so can result in death, fire, or electrical shock.

The ice maker and the remote condenser both require a solid earth ground that meets all applicable codes. The remote condenser is designed to be wired to and powered by the ice maker.

IMPORTANT: A means for disconnection from the supply mains must be incorporated in the fixed wiring in accordance with the wiring rules.

Make Electrical Connections to Remote Condenser

Please follow these instructions carefully to make electrical connections to the remote condenser:

- Determine appropriate wire size for electrical connection. Reference the serial data plate on the condenser for the appliance's Minimum Circuit Ampacity (MCA).
- Ensure the supply voltage is the same as the rated voltage shown on the serial data plate on the condenser
- Route wire through building following all applicable codes and standards.
- Make connections to condenser according to the diagram below.

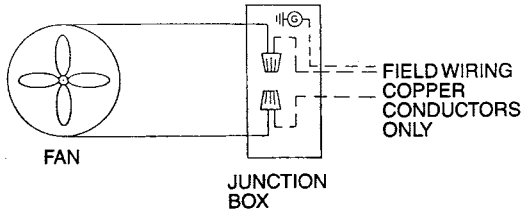

Make Electrical Connections to Ice Maker

⚠ WARNING

Electrical Shock Hazard

Ensure power to the Ice Maker has been turned off.

Failure to do so can result in death, fire, or electrical shock.

IMPORTANT: Ensure power to the ice maker has been turned off before proceeding.

Make electrical connections to ice maker by following these steps:

- Connect the red wire leads from the ice maker to the positive and negative field wire leads connected to the remote condenser
- Secure the ground lead from the field wires underneath the green grounding screw located in the ice maker field wiring junction box
- Secure the junction box cover to the junction box when complete.

OPERATION

Reference the installation instructions for the ice making head which is being installed with the remote condenser for operation instructions.

SERVICE

⚠ WARNING

Electrical Shock Hazard

Disconnect electrical supply from machine prior to performing any adjustments or repairs.

Failure to do so can result in death, fire, or electrical shock.

IMPORTANT: For proper and safe servicing, please read these instructions completely. All service work must be performed by authorized service personnel.

See the following Remote Condenser Refrigeration System Diagram and the component descriptions.

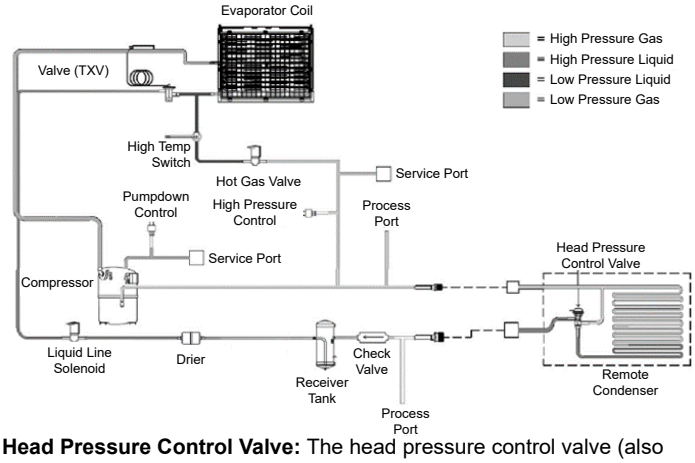

Head Pressure Control Valve: The head pressure control valve (also known as the Headmaster, Mixing Valve, or Low Ambient Control Valve) serves as the head pressure regulating valve. When the temperature of the condenser is above 70 °F [21 °C], the refrigerant flow from the compressor is directed by the mixing valve through the condenser and into the receiver. When the temperature at the condenser drops below 70 °F [21 °C], the pressure in the bellows of the mixing valve becomes greater than the pressure of the liquid refrigerant in the condenser. This change allows the valve to partially restrict the flow of refrigerant leaving the condenser and allows discharge gas to bypass the condenser and flow directly into the receiver, mixing with the liquid refrigerant from the condenser. The amount of discharge gas that bypasses the condenser increases as the ambient temperature decreases. This action of the mixing valve allows the discharge pressure to be properly maintained during low ambient conditions: for CIM Series ice makers, discharge pressure is maintained at approximately 210-240 psig [1.45-1.66 MPa]; for GEM/MFI Series, 170-200 psig [1.17-1.38 MPa]. If the refrigerant system is undercharged and the ambient temperature is below 70 °F [21 °C], the mixing valve will not work properly and allow too much refrigerant to bypass the condenser.

Receiver: Stores liquid refrigerant discharged from the condenser. The quantity of liquid refrigerant in the receiver will vary with the temperature at the condenser coil.

Liquid Line Solenoid: Controls the flow of liquid refrigerant from the receiver to the thermal expansion valve (TXV).

Pump Down Control: Low-pressure switch that has a opening pressure of approximately 5-10 psig [34.4-68.9 kPa] that controls the contactor to shut the compressor off during pumpdown. The low-pressure switch resets (contacts close) when the low side pressure rises to approximately 25-35 psig [172.4-241.3 kPa].

Condenser Fan Motor: The condenser fan motor is a single speed, permanent split capacitor motor and should be wired according to the wiring diagram. The motor is permanently lubricated for long-life.

DISPOSAL

IMPORTANT: This appliance contains refrigerant and must be disposed of in accordance with applicable national, state, and local codes and regulations. Refrigerant must be recovered by properly certified service personnel.

ICE-O-MATIC WARRANTY

Every Ice-O-Matic ice maker is backed by a warranty that provides both parts and labor coverage. To view the warranty details, register products, or check your warranty status visit www.iceomatic.com/warranty.

FINDING A SERVICE PROVIDER

To find a service provider, please visit www.iceomatic.com

CONTACT US

For warranty service, call 1-855-832-4466, or visit our website at www.iceomatic.com.

Mile High Equipment, LLC
11100 E 45th Ave
Denver, CO 80239
United States of America

9081543-01 Rev D
5/14/2026

11100 E. 45th Avenue • Denver, CO 80239 • Phone: 1.866.PURE.ICE • www.iceomatic.com